| PART NAME | NEMA DIE CAST BOX WITH EMI/RFI SHIELDING | PART No. | ANS-3821 | REVISION DATE | 7/20/2010 |
|---|---|---|---|---|---|

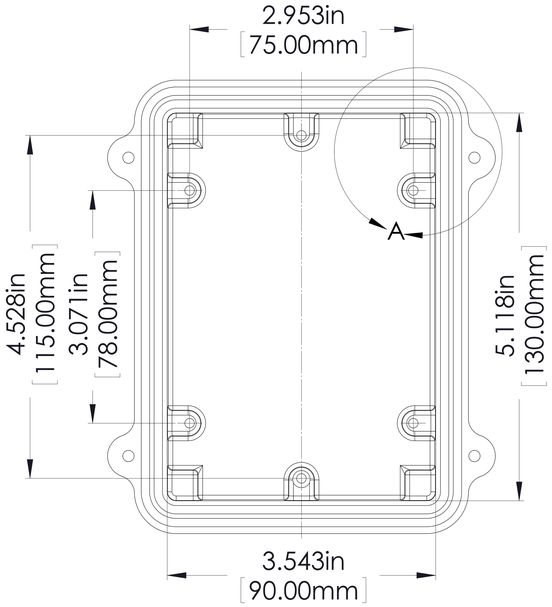


INSIDE BODY DETAILS

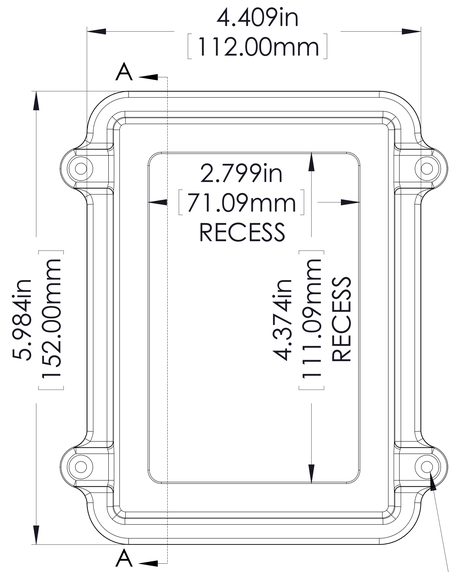


TOP VIEW

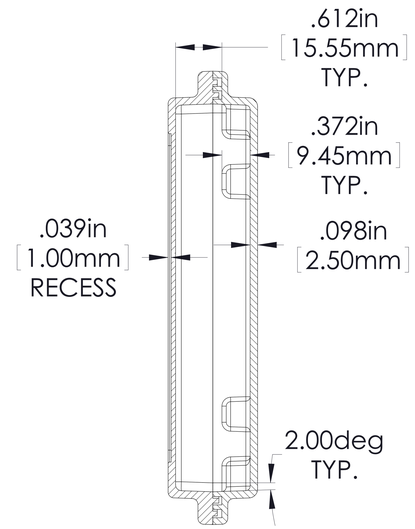


SECTION A-A

FOUR (4) M4x0.7 PITCH
x 20mm (.787in.) LG.
FLATEHEAD SCREWS.

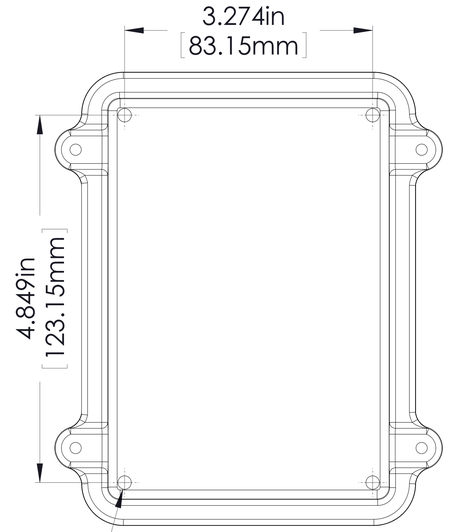


BOTTOM VIEW

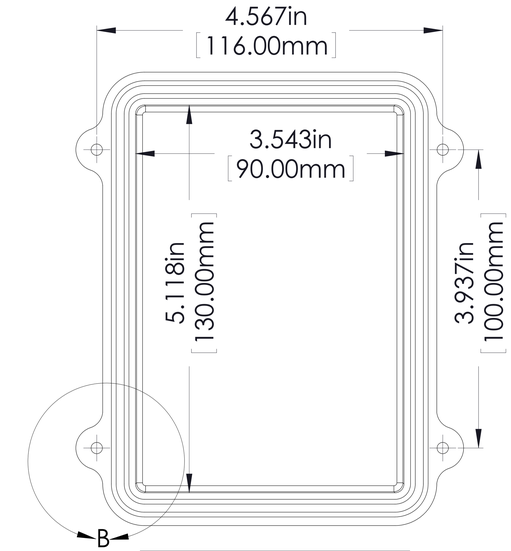


INSIDE COVER DETAILS

∅.177in
[4.50mm]
x 7.5mm (.295in.) DP. (4x)
[ACCEPTS M5 x 10mm(.394in.) LG.
SELF-TAPPING SCREWS.
(NOT SUPPLIED)]

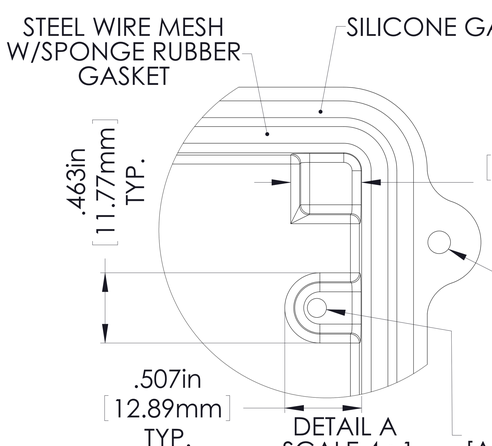


DETAIL A
SCALE 4 : 1

∅.126in
[3.20mm]
x .315in. (8.0mm) DP. (6x)
[ACCEPTS M3.5 x 6mm (.236in.) LG.
SELF-TAPPING SCREWS.
(NOT SUPPLIED)]

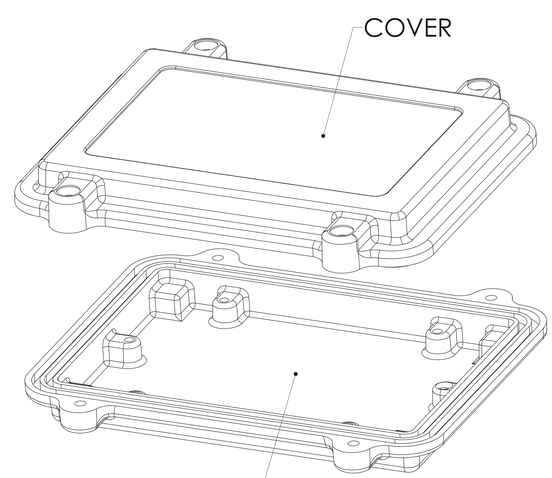


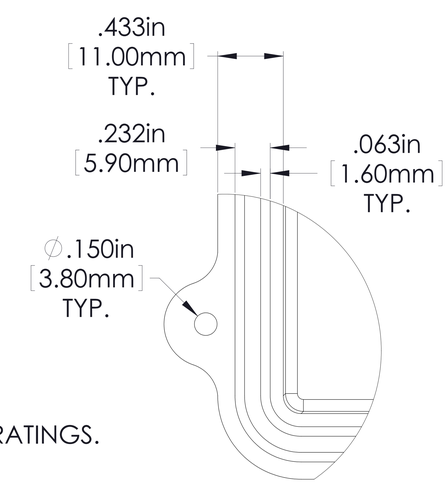


DETAIL B
SCALE 4 : 1

MEETS NEMA 1, 2, 4, 4X, 12, 13 AND IP65 RATINGS.

MATERIAL: ALUMINUM ALLOY ADC-12

FINISH: NATURAL (NO SUFFEX PART NO.)
SMOOTH BLACK (-B SUFFIX PART NO.)

TOLERANCES: ALL HOLE DIAMETERS: ±.005in (.13mm)
ALL OTHER DIMENTIONS: ±.015in (.38mm)